d-flexx dancop est. 1975

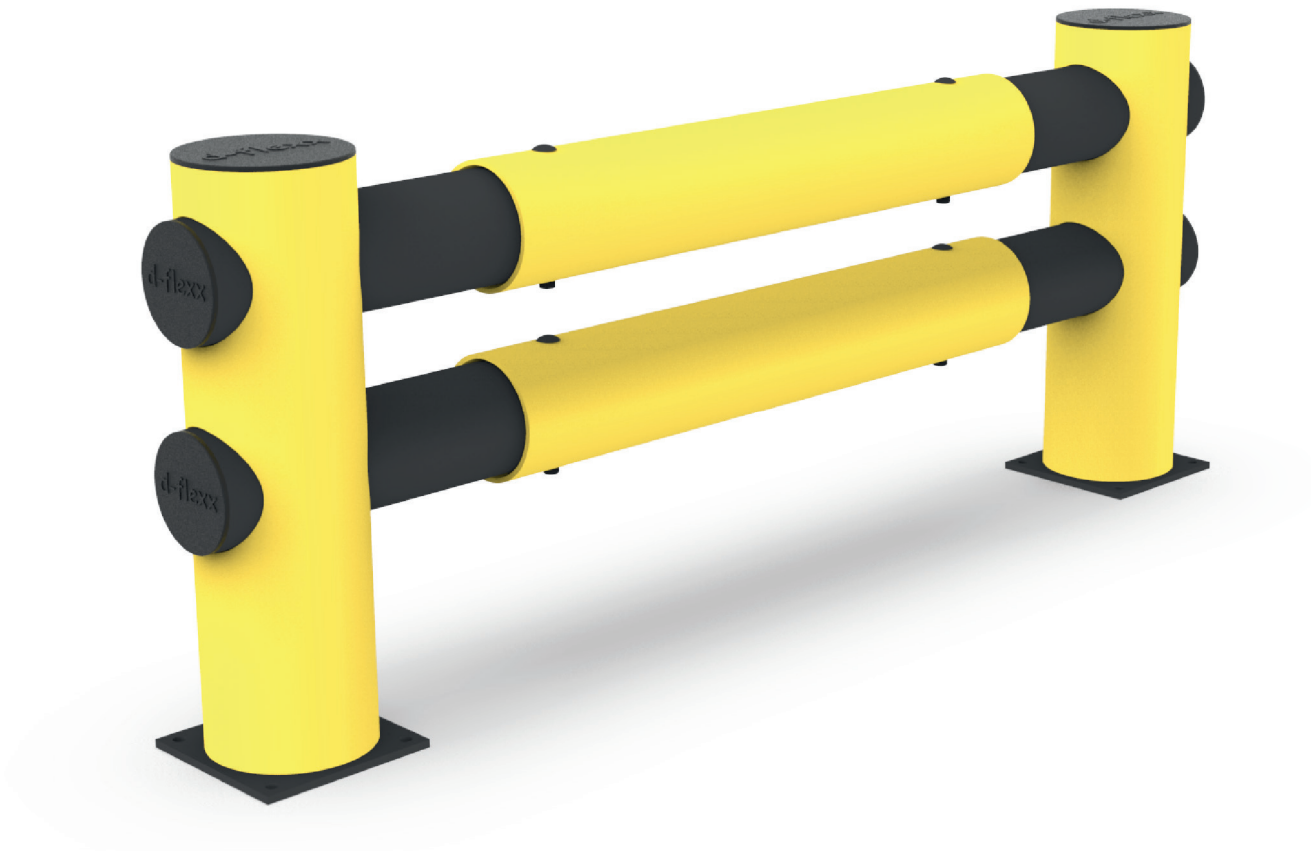

d-flexx
Hotel

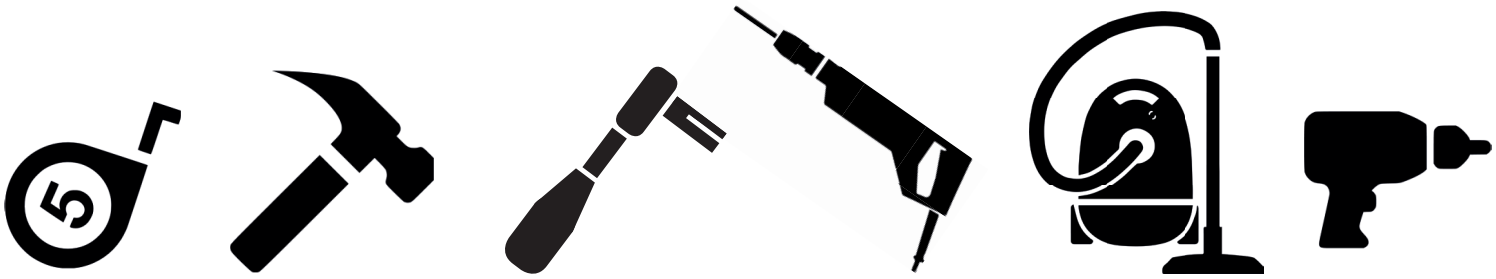

DFVBD

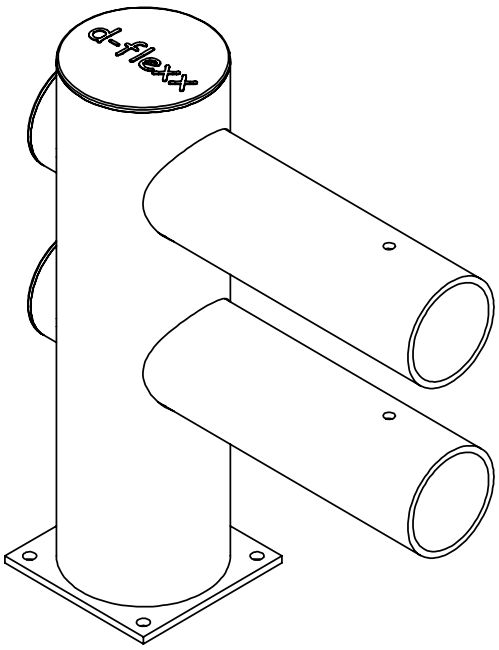

747.27-1

DFVBD-M

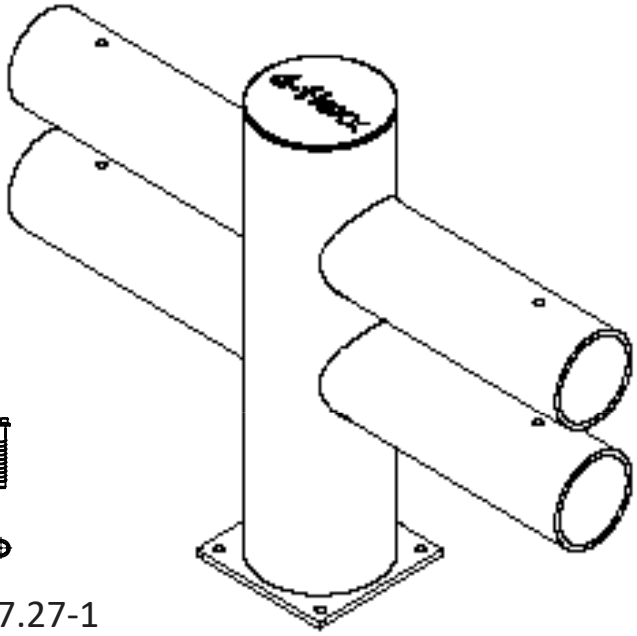

747.27-1

DFVBD-R & DFVBD-I

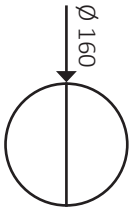

77040 x 2

71031 x 4

71032 x 4

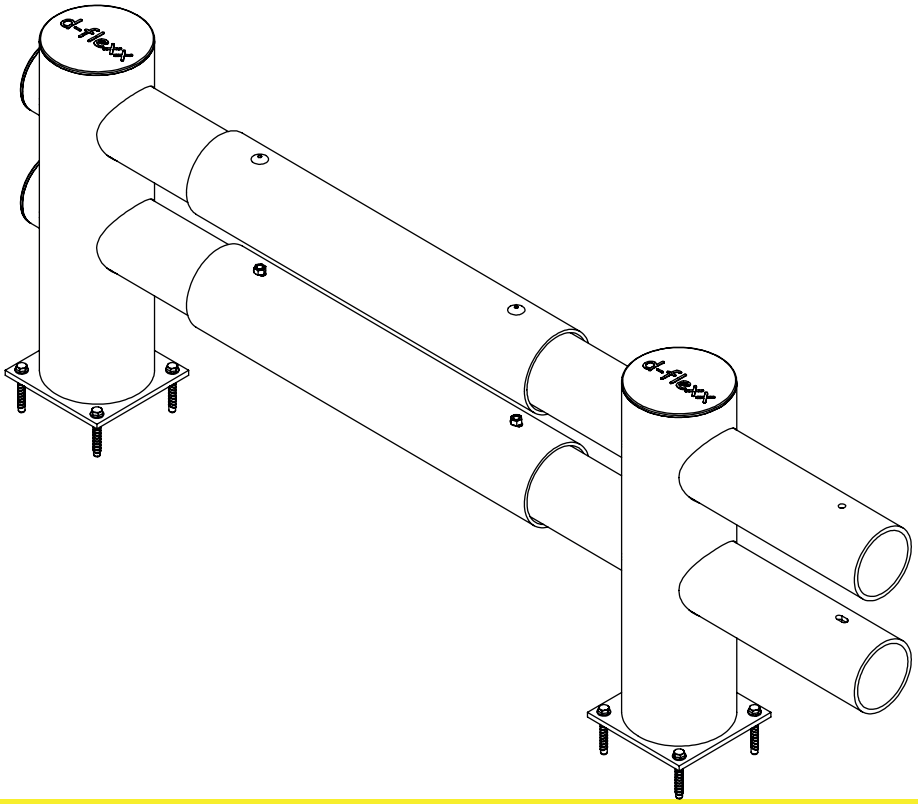

1

1.

2.

3.

4.

Ø 12 mm

2

3

SW18

4

5

6

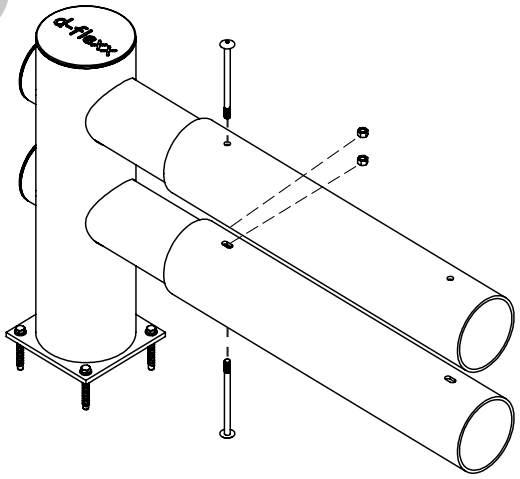

7

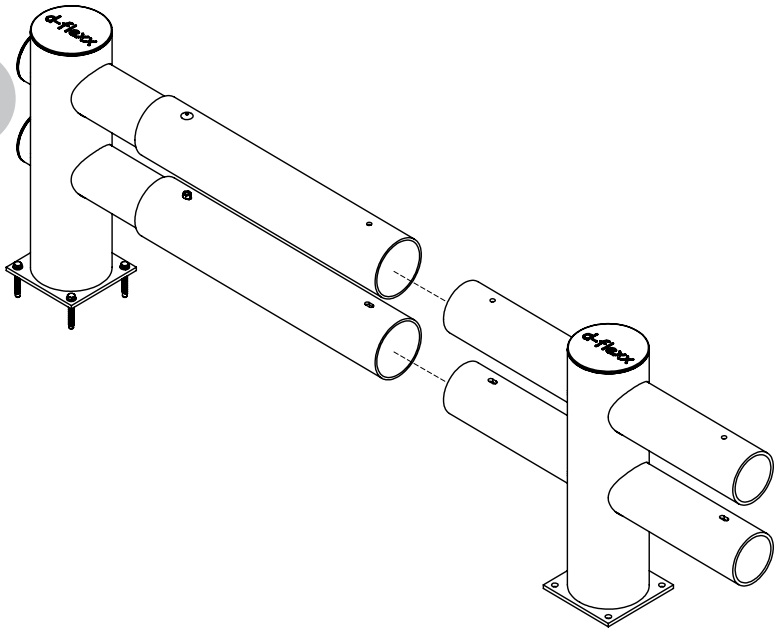

8

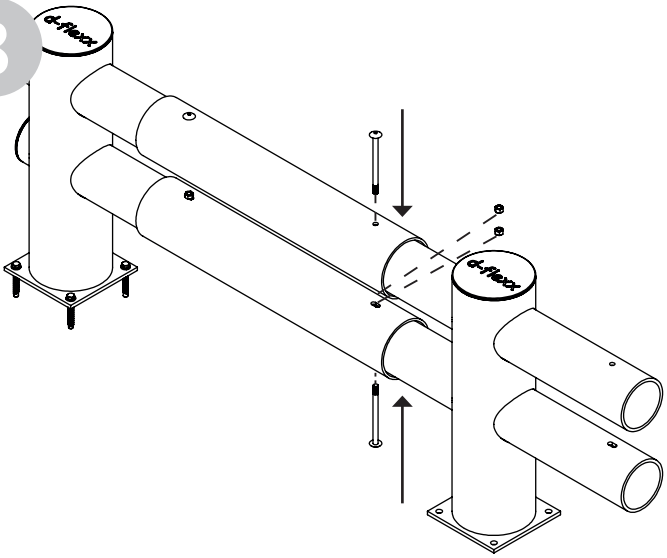
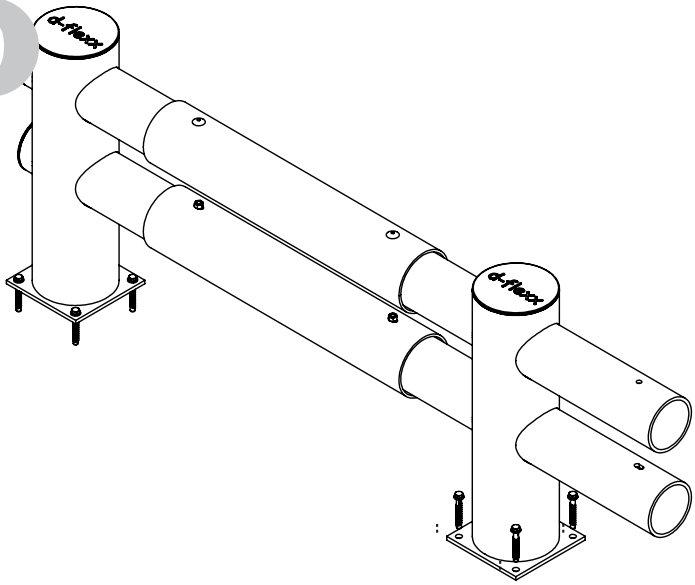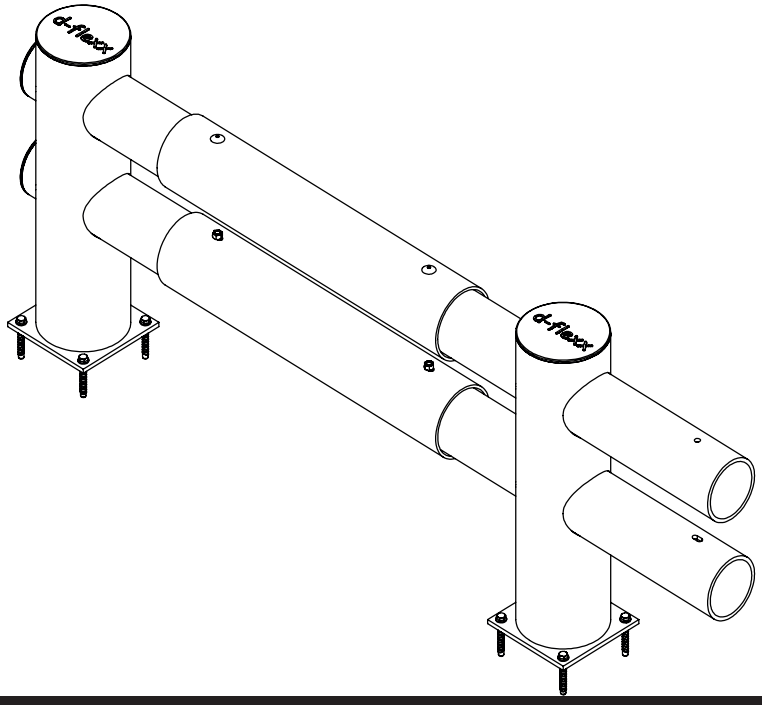
9