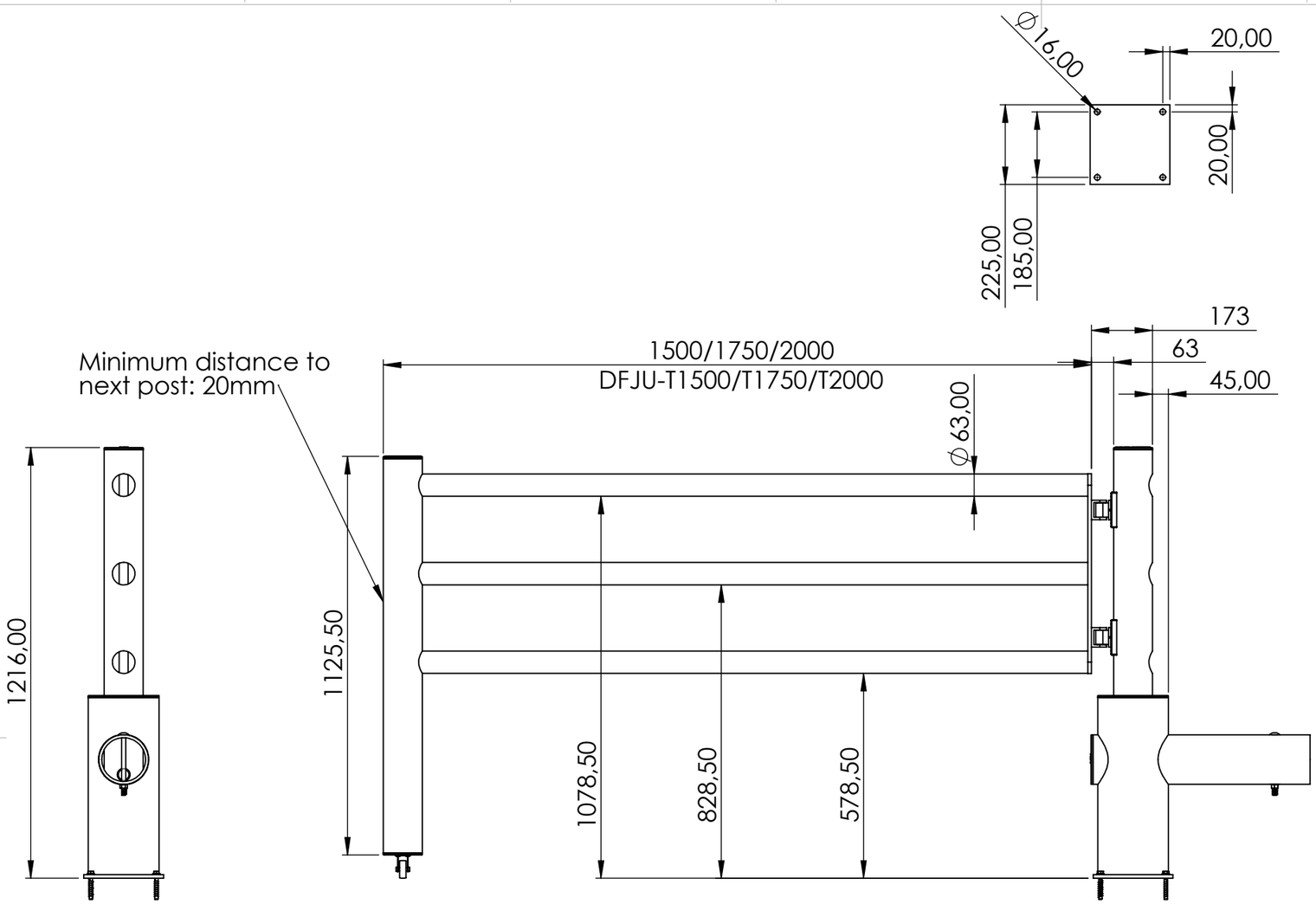

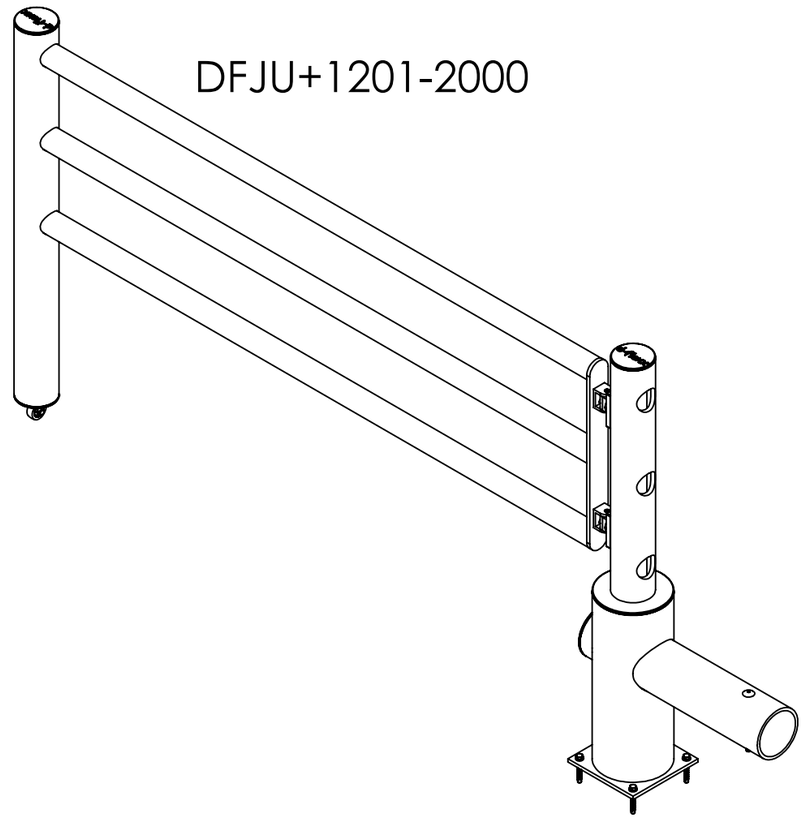

DESIGNER: Christian Poulsen	DATE: 04/01/2019 SCALE:1:15 SIZE:A3
LAST SAVED BY: Christian Poulsen	LAST SAVED DATE:27/04/2020
	RAW MATERIAL:
	TOLERANCES: 2768-1 m
	MATERIAL:
	COLOR:
	DRAWING NO.: DFJU+1201-2000
	TITLE:
	SHEET 1 OF 1

dancop
PERFORMANCE IN MIRRORS

All rights strictly reserved. Reproduction or issue to third parties in any form whatever, is not permitted without written authority from the proprietor

All dimensions are in mm unless otherwise specified